Operator's Manual

LOR Manufacturing

PDC-X

Digital Controller

Publication—PDC_X_MAN_02252015_US

Version 1.0.0-1-ge9bd0a9

Copyright ©2015

Thoroughly read and understand all information presented in this manual before using your digital control.

Notice: The information contained in this manual is subject to change without notice.

LOR Manufacturing shall not be liable for errors contained herein or for consequential damages in connection with the furnishing, performance, or use of this material.

One Year Limited Warranty

LOR Manufacturing Co., Inc. (LOR), for one year from the *Documented Date in Service* of this item, will repair or replace the item from LOR (FOB Weidman, MI U.S.A) if it should prove to be defective in materials or workmanship. This warranty does not cover damage resulting from mishandling in transit, vandalism, misuse, abuse, acts of nature, alteration or lack of reasonable care. LOR does not assume, and is not responsible for any real or consequential damages from claims against the performance of our product, nor is it liable for any cost related to loss of life, property, or revenue. Further, LOR is in no way responsible for installation of our product, and will assume no cost of reinstallation or removal. LOR warranty is in lieu of all other warranties expressed or implied.

You should test your entire system daily to ensure that all components are working properly.

No implied warranty of merchantability or fitness for a particular purpose shall extend beyond one year from documented date in service. The liability of LOR under any such implied warranty and under this limited warranty shall be limited to the repair or replacement of defective parts within one year from date of shipment. LOR shall not be liable for any incidental or consequential damages. Some states do not allow limitations of incidental or consequential damages, so the above limitations or exclusions may not apply to you. This warranty gives you specific rights, and you may also have other rights which vary from state to state.

Contents

Cautions and Warnings iii

Parts Identification v

Specifications vii

1 Wiring 1
- 1.1 Pinout 1

2 Mounting 3

3 Programming 5
- 3.1 Programming the PDC-X 5
- 3.2 Restoring Factory Settings 5

4 Advanced Usage 7
- 4.1 Enable/Disable the “Autofeed” function 7
- 4.2 Viewing J1939 Information 7
- 4.3 Scroll Feature 7

5 Troubleshooting 9
- 5.1 Viewing J1939 Fault Codes 9
- 5.2 Display reads “– – – –” 10
- 5.3 Controller does not power up 10
- 5.4 Outputs not functioning properly 10
- 5.5 No Display 11
- 5.6 Feed does not re-engage after stopping 11

Appendix A J1939 Symbols 13

Cautions and Warnings

Warning: Before welding on the Machine, ensure that all connectors are disconnected from the Controller. Failure to do so could result in damage to the panel itself or its components

Warning: Disconnect all power before making any wiring connections to the Controller

Caution Improper operation of these controls could cause damage to equipment. Do not allow anyone to operate this equipment before completely reading the manual

Caution: Electronic controls are intended as general purpose switches. They are not safety devices. Malfunctions may occur

Caution: Electronic products are used to initiate an operation where false operation could be dangerous. Point-of-operation guarding devices must be installed and maintained to meet OSHA and ANSI Machine Safety Standards. The manufacturer shall not accept responsibility for installation, application, or safety of systems

Parts Identification

This section describes the main components of the PDC-X (Fig:1, Table:1).

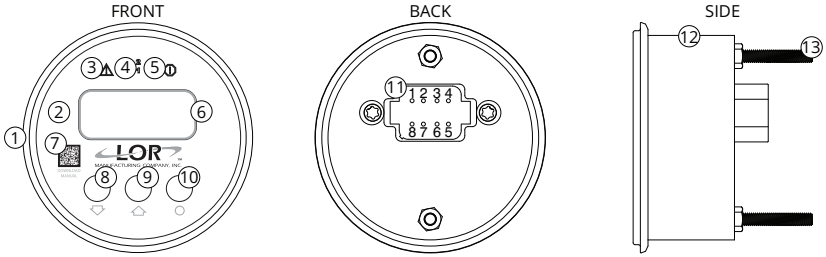

Figure 1: *PDC-X Parts Identification*

Table 1 *– PDC-X Parts Identification*

No.	Description
1	Bezel
2	Faceplate
3	CAN Fault Warning Light
4	Output Lights
5	CAN Fault Shutdown Light
6	LCD
7	Download Manual QR Code
8	Down Button
9	Up Button
10	Set Button
11	Output Connector
12	Housing
13	Mounting Posts

Specifications

Table 2 *– General Specifications*

General Specifications	
Engine Compatibility	Mechanical Gas or Diesel Electronic Gas or Diesel with J1939 CAN Bus
Tachometer Range	0–9999 RPMs
Tachometer Accuracy	$\pm$ 10 RPM
Display Readout Type	Four fully active LCD Digits
Character Height	Approximately $\frac{1}{4}''$–$\frac{1}{2}''$
Input Voltage	9–36 VDC
Outputs	Two MOSFET (7.5 A each)
Connector	8-pin Deutsch “B” Key
Housing Construction	Passivated aluminum, non-magnetic
Faceplate	Acrylite Plus
Humidity Vent	Gortex™patch
Bezel	Black Anodized Aluminum
Mounting Bracket	Aluminium
Trim Ring	Plastic[1]
LED Feedback	CAN Bus Warning (Amber) Output #1 Active (Green) Output #2 Active (Blue) CAN Bus Fault Shutdown (Red)
Lockable Settings	OEM Only

Table 3 *– Environmental Specifications*

Environmental Specifications	
Operating Temperature	-10° to 80° C (14° to 176° F)

[1] Optional

Table 3 *– Environmental Specifications continued...*

Environmental Specifications	
Storage Temperature	-55° to 82° C (-67° to 180° F)
Water Resistance	IP-68: 30 minute submersion at 1 meter

CHAPTER 1

Wiring

> **Note**
>
> Diode suppression on all coils are essential to protect electronic equipment from being damaged.

1.1 Pinout

The following table gives the pinout for the Deutsch connector on the rear of the PDC-X:

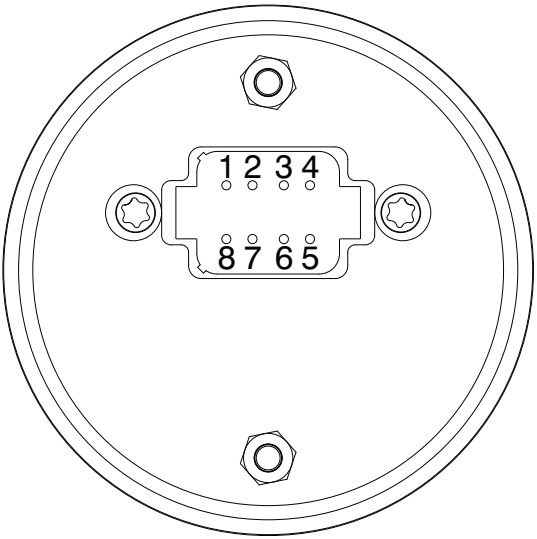

Figure 1.1: *PDC-X Pinout*

Table 1.1 *– PDC-X Pinout*

No.	Description
1	Not Used
2	CAN Low
3	(+) VDC
4	Output #1
5	Output #2
6	Ground
7	CAN High
8	Not Used

CHAPTER 2

Mounting

The following diagram shows the mounting dimensions for the PDC-X.

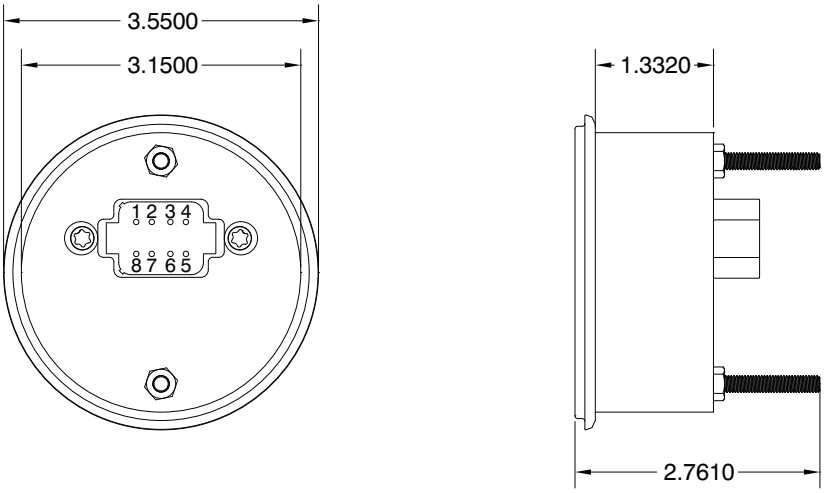

Figure 2.1: *PDC-X Parts Mounting*

Note
3.25” diameter cutout is required for installation. Allow 2” rear clearance when installing this unit.

CHAPTER 3

Programming

3.1 Programming the PDC-X

Should the need arise to adjust your HI, LO, or BACK settings do the following:

1. Press and hold ▲ + ● while turning the keyswitch to the "On" position. Release the buttons when the display reads $COdE$
2. Use the ▲ and/or ▼ buttons to enter 0
3. Press the ● button
4. Use the ▲ and/or ▼ buttons to set the HI RPM value. Once the desired value has been reached press the ● button
5. Use the ▲ and/or ▼ buttons to set the LO RPM value. Once the desired value has been reached press the ● button
6. Use the ▲ and/or ▼ buttons to set the BACK value. Once the desired value has been reached press the ● button

The settings are now saved to memory and the system can be used as normal.

3.2 Restoring Factory Settings

Should it become necessary to restore the controller to factory defaults simply press and hold the ▼ + ● buttons[1] while turning the keyswitch to the "ON" position. When the display reads DEF release the buttons.

[1] Perform this step with the machine off

CHAPTER 4

Advanced Usage

4.1 Enable/Disable the "Autofeed" function

The "Autofeed" function is enabled by default. Should it be desired to disable this function simply press and hold the ▼ button for two to three seconds.[1]

> **Note**
>
> When the "Autofeed" function is disabled the controller will display Engine RPMs for four seconds then flash "Off". The controller will continue this cycle until the "Autofeed" function is re-engaged

To re-engage the "Autofeed" function depress and hold the ● button for one second.

4.2 Viewing J1939 Information

The PDC-X has the ability to display information from the Machine's ECM via the J1939 CAN Bus. You can view the following engine parameters: RPMs, Battery Voltage, Water Temperature, Oil Pressure, Boost Pressure, Actual Load, Fuel Consumption, and Actual Engine Hours.[2]

To view the J1939 information simply press the ▲ button while the system is running to quickly move through the different parameters.

4.3 Scroll Feature

The scroll feature allows you to view all the J1939 Engine Parameters on the fly without having to step through the programming sequence. To access the scroll feature simply

[1] The system must be either running or have the keyswitch must be in the "On" position

[2] This is only applicable if the controller is set to J1939 Mode from the OEM

press and hold the button for three seconds. When the scroll feature is active the PDC-X will continuously cycle through the J1939 information. Each parameter will be displayed for five seconds.[3]

To stop the scroll feature simply press the button.

[3] See Footnote 2

CHAPTER 5

Troubleshooting

5.1 Viewing J1939 Fault Codes

The PDC-X has the ability to read and display any Fault Conditions that are present on the J1939 Bus. If an error is present the controller the CAN Bus Fault Warning or CAN Bus Fault Shutdown lights will be illuminated. In order to view the fault codes:

1. Press the ● button. The controller will display “J FC” then “FC 1”
2. Press the ● button. The controller will scroll through the following:
    - The controller will display “SPN” followed by a number
    - The controller will display “FI” followed by a number
    - The controller will display “OC” followed by a number

The fault codes are laid out as follows:

- The display reads “F #”. This number indicates the number of the fault code. The faults are numbered sequentially from 0–99
- The display then reads “SPN” followed by “#”. This indicates the SPN (Suspect Parameter Number)
- The display then reads “FI” followed by “#”. This is the FMI (Fault Mode Indicator)
- The display then reads “OC” followed by “#”. This is the number of occurrences of the fault

Note

The PDC-X only displays active fault codes. It does not store these faults, but the controller will display the fault until it is cleared.

Note

For troubleshooting purposes be sure and write down the fault code information (SPN, FI, and OC)

5.2 Display reads "– – – –"

If the controller display reads "– – – –" it means that the J1939 Bus is not connected properly or has a problem. Check the following:

1. Check the connection to the PDC-X to make sure that there is good contact at all connection points
2. With a multi-meter, check the resistance between the J1939 wires anywhere on the Bus. Anything other than 60Ω indicates a resistance error on the J1939 Bus

5.3 Controller does not power up

If the controller does not power up check the following:

1. Check all fuses to make sure that they are not blown or faulty
2. Check all connections to the Controller. Make sure that all connections are tight and that all pins/sockets are making good contact
3. Whit a multi-meter, check the voltage coming into the controller. Also, check continuity of the power wire as well as the ground wire

Caution

Never replace a bad fuse with one of a higher rating

5.4 Outputs not functioning properly

1. See Page 5 to restore factory default settings
2. Check voltage at the coils. Ensure that the Ohm reading for the coil is within the Manufacturer's specifications[1]

[1] An ohm reading close to 0 is an indicator of a shorted coil

5.5 No Display

1. Check continuity of the Red wire to a clean power source
2. Check the 7.5 A fuse
3. Check continuity of the Black wire to a good ground connection

5.6 Feed does not re-engage after stopping

1. See Page 5 to reset all settings to factory defaults
2. Check all connections to the Controller. Make sure that all connections are tight and that all pins/sockets are making good contact
3. Check all fuses to make sure that they are not blown or faulty

Caution
Never replace a bad fuse with one of a higher rating

APPENDIX A

J1939 Symbols

***Table A.1** – J1939 Symbols*

Parameter		Unit of Measure
	Engine Speed	RPM
	Coolant Temp	°F
	Oil Pressure	PSI
	System Voltage	VDC
	Actual Engine Hours	h
	Percent Load	%
	Fuel Consumption	g/h
	Boost Pressure	PSI